SANSUI AU-111 Vintage

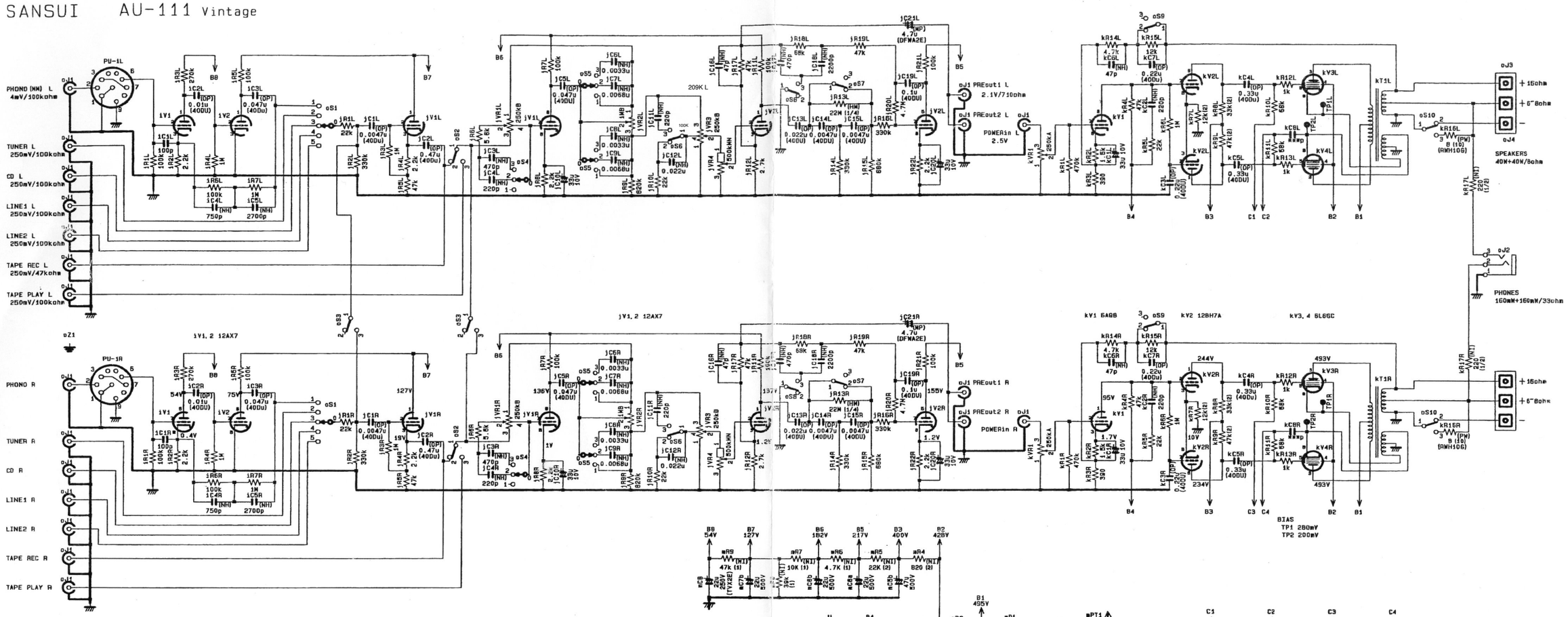

oS1 FUNCTION SELECTOR
- 1 PHONO
- 2 TUNER
- 3 CD
- 4 LINE1
- 5 LINE2

oS2 TAPE MONITOR SW
- 2 OFF
- 3 ON

oS3 MODE SW
- 2 STEREO
- 3 MONO

oS4 TONE SELECTOR
- 1 DEFEAT
- 2 5KHz
- 3 2.5KHz

oS5 TONE SELECTOR
- 1 DEFEAT
- 2 250Hz
- 3 500Hz

oS6 LOUDNESS SW
- 1 OFF
- 2 ON

oS7 LOW FILTOR SW
- 2 OFF
- 3 ON

oS8 HIGH FILTOR SW
- 2 OFF
- 3 ON

oS9 PRESENCE SW
- 2 OFF
- 3 ON

oS10 SPEAKERS SW
- 2 ON
- 3 OFF

jVR1L, R TREBLE VOLUME
jVR2L, R BASS VOLUME
jVR3 VOLUME
jVR4 BALANCE VOLUME
kVR1 POWER AMP LEVEL VOLUME
mVR1~4 BIAS ADJUST VOLUME
mVR5, 6 HUM BALANCE VOLUME

SYMBOL

- Ceramic Capacitor
- (NH) Polypropylene Film Capacitor
- (SH) Metalized Polyestel Film Capacitor
- (MP) Metalized Polyestel Film Capacitor
- (OC) Oil Paper Capacitor

Insulated High Reliability Fixed Carbon Film Resistor-RN
- (NI) Non-Inflammable Resistor
- (HM) Coat-Insulated High Megohm Resistor
- (PW) Power Type Wire Wound Fixed Resistor

CAPACITORS
Are in uF, Unless Otherwise Noted p: pF

Electrolytic Capacitor
Capacitance (uF) / Voltage (V)

RESISTORS
Are in ohms, 1/2Watts, 5%Tolerance
Unless Otherwise Noted k: kilo Ohms